100-PIN PLASTIC LQFP (FINE PITCH) (14x14)

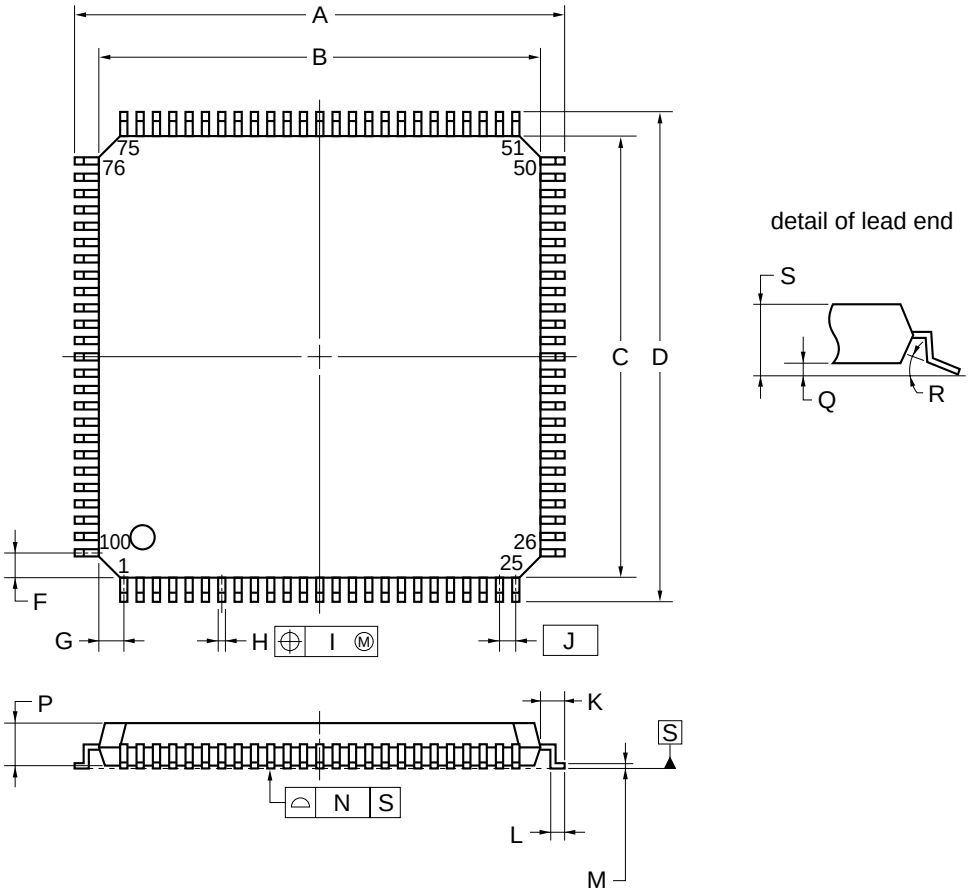

NOTE

Each lead centerline is located within 0.08 mm of its true position (T.P.) at maximum material condition.

ITEM	MILLIMETERS
A	16.00±0.20
B	14.00±0.20
C	14.00±0.20
D	16.00±0.20
F	1.00
G	1.00
H	$0.22^{+0.05}_{-0.04}$
I	0.08
J	0.50 (T.P.)
K	1.00±0.20
L	0.50±0.20
M	$0.17^{+0.03}_{-0.07}$
N	0.08
P	1.40±0.05
Q	0.10±0.05
R	$3^{\circ}{}^{+7^{\circ}}_{-3^{\circ}}$
S	1.60 MAX.

S100GC-50-8EU, 8EA-2